Diritti riservati All rights reserved

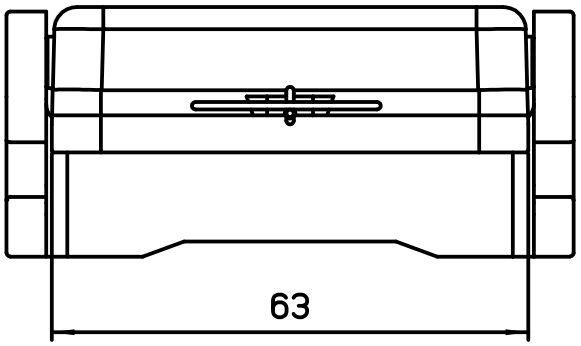

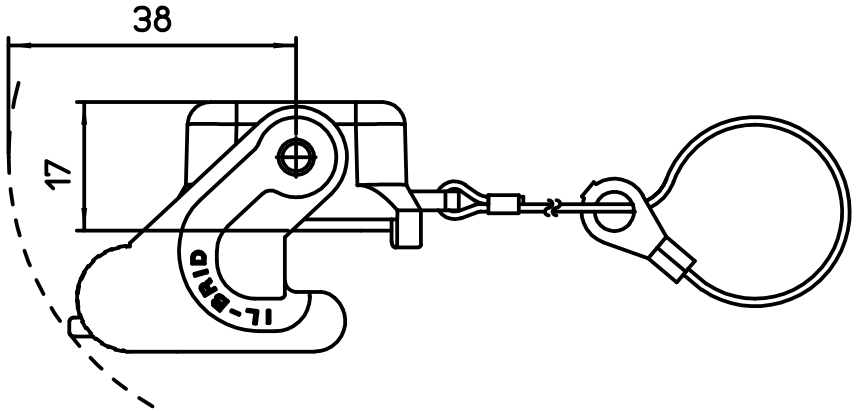

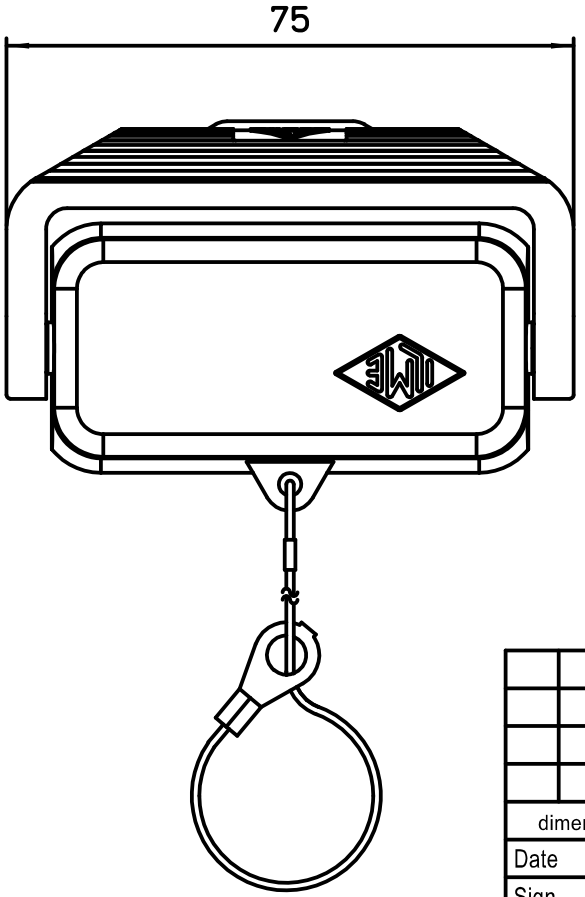

dimensions in mm	CZC 15 LG Cover with 1 lever	Scale 1:1
Date 01/07/19		
Sign. D.Cominelli		